ISSN: 0974-2115
www.jchps.com Journal of Chemical and Pharmaceutical Sciences

Design of distributed model predictive control using particle swarm optimization for alkylation process

Betty Elezebeth Samuel[1] and Latha Parthiban[2]
[1] Department of Computer Science & Engineering, St Peter's University, Tamilnadu, India.
[2]Department of Computer Science and Engineering, Pondicherry University Community College, Puducherry, India.
***Corresponding author: E-Mail: bettyelezebeth@gmail.com**

ABSTRACT

In this paper, a distributed Model Predictive Control (MPC) is designed for alkylation of Benzene with Ethylene. Anovel algorithm is developed using particle swarm optimization and the advantages and disadvantages of approach were analyzed. In the centralized process, when MPC was used, it is noted that there are many decision variables and measurements involved resulting in increased computational time and many limitations in organizational maintenance. The higher dimension decision variable and maintenance problems were reduced in decentralized MPC where work is distributed between many cooperative controllers and processors. Based on this research work, it can be concluded that decentralized MPC has better performance than centralized systems.

KEY WORDS: Model Predictive Control, optimization, swarm intelligence, Generalized Predictive Control.

1. INTRODUCTION

For need of safety, all chemical process operation are depending on automated control systems which has triggered research in this area. Classical process control systems like PID controllers are very useful in industries for process control and with decentralized architecture having upper hand now, one PID controller does not result in failure of entire system. Even though many methods to optimize the performance of decentralized control loop interactions are available, there is no accounting for multivariate interactions that led to the early development of centralized MPC (Alessio, 2008; Camponogara, 2009; Alvarado, 2011). In all these work, methods are available to quantify the variableand its interactions.

In centralized approach which was designed early, a multivariable control system is considered which calculates the control action necessary for various input and output interactions. But because of high dimension and complexity, maintenance problem with less fault tolerance was encountered resulting in need for decentralized non-linear control. Thispaper is structured as follows: section 2 discusses about MPC, section 3 discusses about swarm intelligence, section 4 discusses about decentralized model predictive control and in section 5 conclusions are provided.

2. MATERIALS AND METHODS

Model Prediction Control: MPC is widely used in oil refineries and chemical plants (Gerardo Beni, 1993) as it can reflect the behavior of complex dynamic system. Model Predictive Control algorithms predict the change in dependent variables due to change in independent variables. Differences in MPC methodologies lies in the formulation of control problem. Most famous MPC method is Generalized Predictive Control (GPC) designed by Clarke (Bemporad, 1999). GPC can calculate control signals by reducing cost function over a prediction horizon. The function that control action tries to minimize is the variation between plant output and desired value I that is expressed as

$$I=y_{ref}(t)-y(t)=e(t) \quad (1)$$

with y(t) is the plant output, $y_{ref}(t)$ is the desired response, e(t) is the error and t is sample time. The optimization index I based on square error is expressed as

$$I^2 = [y_{ref}(t)-y(t)]^2 = [e(t)]^2 \quad (2)$$

The aim of MPC is to:

- Minimize the optimization index I.
- Maintain the output within specified range and derive some output variables.
- Maintain a range for input variables.
- Control the various process variables.

Design of an MPC has the following three components

a) A system model for predicting the future systems evolution and the predicted value depicts the models accuracy.
b) The performance index of system over a finite horizon provides the restrictions on control inputs and system state
c) A receding horizon that provides feedback that reduces disturbances and modelling errors.

In centralized system shown in fig 1, all inputs of control system are optimized `using a single objective function.

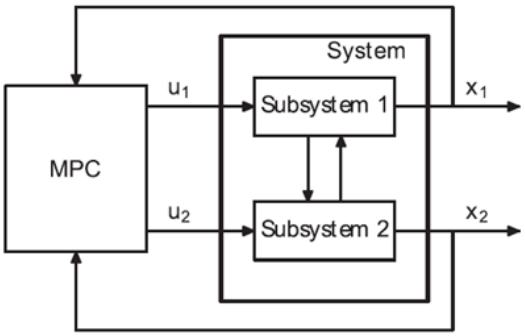

Figure.1.Centralized MPC architecture

Optimization Techniques Using Swarm Intelligence: Swarm intelligence (SI) is a self-organized and collectivebehavioral system. It was firstly introduced in the context of cellular robotic systems by Gerardo Beniand Jing Wang in year of 1993. SI is an intelligent optimization technique inspired by the collective behavior of birds, fishes and colonies of insects while searching for food. There is no centralized controller but they exhibit complex global behaviour and all individuals follow simple rules to interact with neighbours. The general rules of birds flocking are 1) Collision Avoidance 2) Velocity matching 3) Flock Centring.

The optimization potential of collective behaviors of insects have been studied in many researches. An insect may have only a few hundreds of brain cells but insect colonies are capable to elaborate communication systems, to develop terrific resistance to the threats, to develop complex social relationships and creation of intelligent skills. The similar behaviors are also observed in birds flocking and fish schooling. SI methods are part of meta heuristic family of algorithms have been used and in the various areas of research.

Data mining is one of the research areas of application where SI techniques have been used efficiently in classification, clustering, feature selection, preprocessing and outlier detection. Similarly, the SI techniques have been used extensively with various types of Artificial Neural Networks (ANN) for improving the performance. Artificial Neural Networks is one of the soft computing techniques used for data classification where SI plays vital role for improving the results.

Swarm intelligence algorithms have proved to be very efficient in solving real world optimization problems. The Swarm Intelligence based approaches are applied in Military Applications, Robotics Navigation and Space Research. Figure 2 shows the collective behaviour of ants and bees.

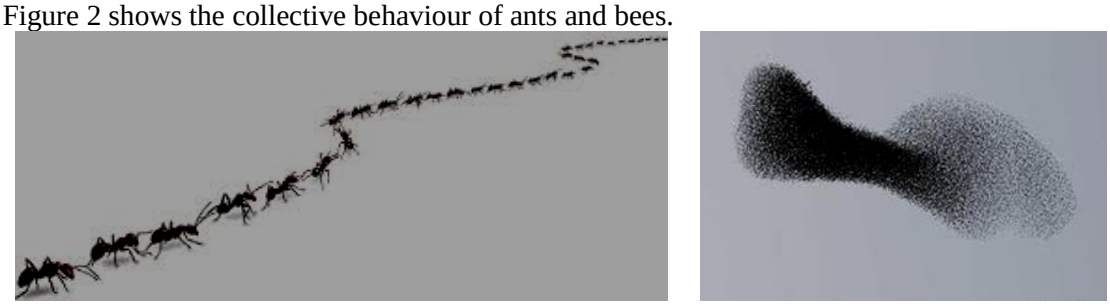

Figure.2. Ant Colonies and Swarm of bees

Particle Swarm Optimization (PSO): The steps involved in PSO have been listed below. Where Swarm Size represents the population size of the swarm participating in the search, pbest is the personal best position of individual particles experienced so far and gbest is the global best positions in the swarm. Figure 3 shows the convergence of particles in PSO.

Procedure of PSO: Generate random population of N solutions (particles);

```
For(i=0;i<Swarm_Size;i++)
Evaluate fitness f(x_i)
Initialize the value of weight factor ω;
while (termination condition is not true)
{
for(i=0;i<Swarm_Size;i++)
{
if(f(x_i)>pbest_i) pbest_i=x_i;
if(pbest_i>gbest_i) gbest_i=pbest_i;
Update(Position x_i, Velocity v_i);
Evaluate f(x_i);
}}
```

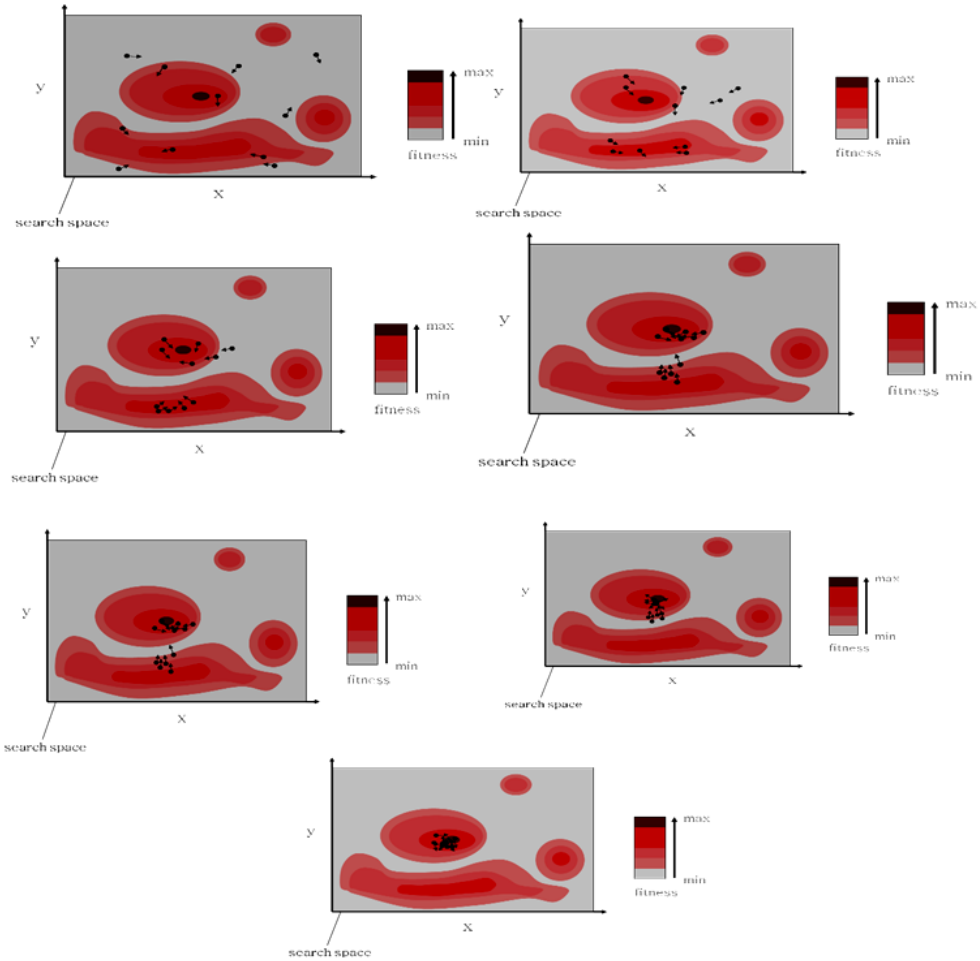

Figure.3. Convergence of particles in PSO.

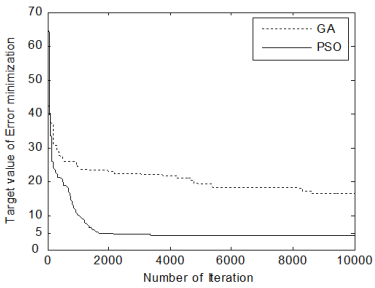

Figure.4. PSO Vs GA

In PSO, the agents are referred as particles and particles move around the solution space. The movement of particles evaluated using fitness criterion at every timestamp and best move is found. The convergence of particles according to their fitness in shown in Figure 3. The main difference between PSO and other algorithms is that the number of particles involve in search process is higher in PSO and the error minimization PSO is higher than GA as shown in Figure4.

Decentralized model predictive control: The experimental setup for the chemical process consists of 4 CSTR and a flash tank separator as shown in Figure 5. The three CSTRs in series doe's the work of alkylation of benzene with ethylene.

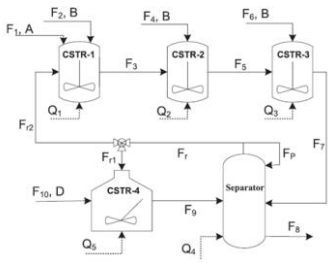

Figure.5.Benzene with ethylene alkylation process

Through F1, pure benzene is fed and through F2, F4 and F6 pure ethylene is fed. Inside the first three CSTRs, two important reactions take place. Ethylbenzene (C) is produced when Benzene (A) combines with ethylene (B) (reaction 1) which then reacts with ethylene to yield 1,3-diethylbenzene (D) (reaction 2). Effluents in CSTR-3is fed to flash tank separator where benzene is divided through vaporization and condensation.

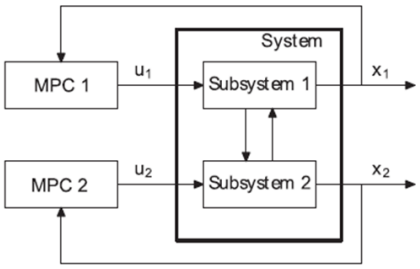

Figure.6.Decentralized MPC architecture

In CSTR-4, 1,3-diethylbenzene reacts with benzene to produce ethyl benzene (reaction 3). Chemicals that leave from CSTR-4 pass into separator. The control objective is to stabilize the process at a desired operating steady-state and achieve an optimal level of closed-loop performance. The decentralized MPC architecture shown in Figure 6 has as many controllers depending on requirement unlike centralized MPC which has one optimization problem.

3. RESULTS AND DISCUSSION

Distributed model Prediction control:

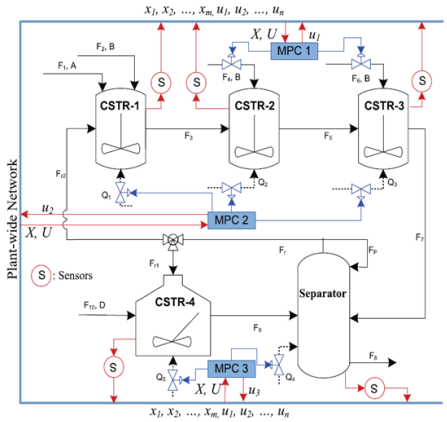

Figure.7.Distributed MPC for Alkylation process

Figure7shows the distributed MPC for alkylation process. Here, three MPCs operate three sets of control inputs and manage their actions. MPC1 calculates Q1, Q2 and Q3, MPC 2 calculates Q4and Q5, and MPC 3 calculates F4 and F6. This breakdown of control loops is done by different physical considerations like MPC 1 calculates the flow of ethylene into the process, MPC2 calculates the heat given/removed to the first three reactors and MPC3 calculates the heat given/removed to separator and fourth reactor (Panagiotis, 2013).

When the number of control actuators is divided into subsets by MPC controller, the following distributed MPC algorithm is used. Let x(t) represent the feedback of the state of the system at asynchronous time instants t_a where$\{t_a \geq 0\}$ represents the increasing time sequence and d_a corresponds to delay at time t_a. The various steps in iterative PC design strategy is shown in Table 1

Table.1. Iterative DMPC design strategy

1. When $x(t_a - d_a)$ is present at t_a, all MPC obtain the state measurement and find whether any new information is got. When $t_a - d_a > \max t_1 - d_1$, with 1<a go to Step 2. If not, skip step 2, and go to step 3.
2. All DMPC find the current system state $x^e(t_a)$ and calculate the future input trajectories with original input guesses created by h(·).
3. At iteration c(c=1):
3.1. Each controller evaluates their own future input trajectory based on $x^e(t_a)$ and the latest input trajectories of all other distributed controllers
3.2. The controllers exchange their future input trajectories and based on this, each MPC measures and stores the value of cost function.
4. If a termination condition is fulfilled, MPC sends the future input trajectory corresponding to the smallest value of the cost function to its actuators; if the termination condition is not satisfied, go to Step 3 (c? C+1).
5. When a new measurement is received (a? a+1), go to Step 1.

4. CONCLUSION

In this paper, a distributed model predictive control using particle swarm optimization for alkylation process is designed. As the industrial processes becomes automated, the need for DMPC has increased and is very important for next generation control systems. Our future work will be to use multi agents in MPC for effective control.

REFERENCES

Alessio A and Bemporad A, Proceedings of the American Control Conference Seattle, Washington, 2008, 3577–3582.

Camponogara E and Barcelos de Oliveira B, IEEE Transactions on Systems, Man, and Cybernetics, Part A: Systems and Humans, 39, 2009, 1331–1338.

Camponogara E, Scherer H F and Vila Moura L, Proceedings of the IEEE International Conference on Systems, Man, and Cybernetics, 2009, 3726–3732.

Gerardo Beni and Jing Wang, Robots and Biological Systems, Towards a New Bionics? 1993, 703 – 712.

Panagiotis D, Christofidesa, Riccardo Scattolini, David Munoz de la Penad, JinfengLiue, Computers and Chemical Engineering, 51, 2013, 21– 41.